18V 1.5MHz 2.5A Fast-PWM Synchronous Step-Down Converter

DESCRIPTION

The MT8553 is a fully integrated high efficiency synchronous step-down converter which requires minimum number of external components. It offers very compact solution with up to 2.5A continuous output current over a wide input range.

The MT8553 employs proprietary Constant On-Time (COT) control scheme providing superior transient response and maintaining constant switching frequency under the continuous conduction mode operation. The external ramp compensation network allows stable operation with ultra-low equivalent series resistance (ESR) output ceramic capacitors. An internal compensated error amplifier in the control loop provides excellent line and load regulation.

The MT8553 integrates extensive protection functions include: UVLO, OCP, UVP and thermal shutdown. The converter is available in a small 6pin SOT23_6L.

FEATURES

- Input Voltage Range: 4.5V to 18V
- Output Voltage range: 0.6V to 6.5V
- 2.5A continuous output current
- Support 100% duty cycle Low Dropout Operation
- Stable operation with low ESR ceramic output capacitors
- Fast PWM COT control with superior transient performance
- 1.5MHz Switching frequency
- Internal 2ms Soft-start
- Integrated 80mΩ/ 56mΩ HS/LS Power Switches
- Accurate EN UVLO threshold
- High Efficiency Operation at light load MT8553N
- Thermal Shutdown with Auto recovery.
- Hiccup mode short circuit protection
- Available in a 6-pin SOT23_6L Package

APPLICATIONS

- Laptop Computer
- Tablet PC
- Networking Systems
- Personal Video Recorders
- Flat Panel Television and Monitors
- Distributed Power Systems

TYPICAL APPLICATIONS

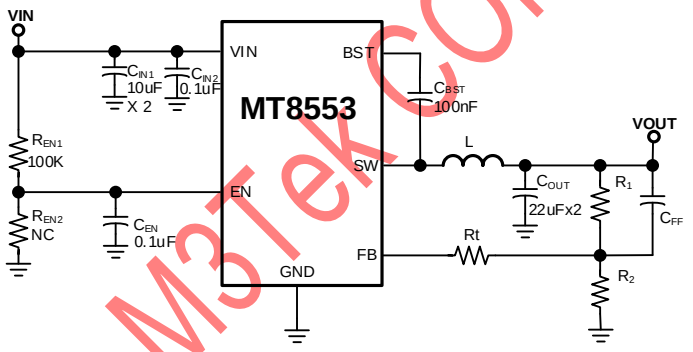

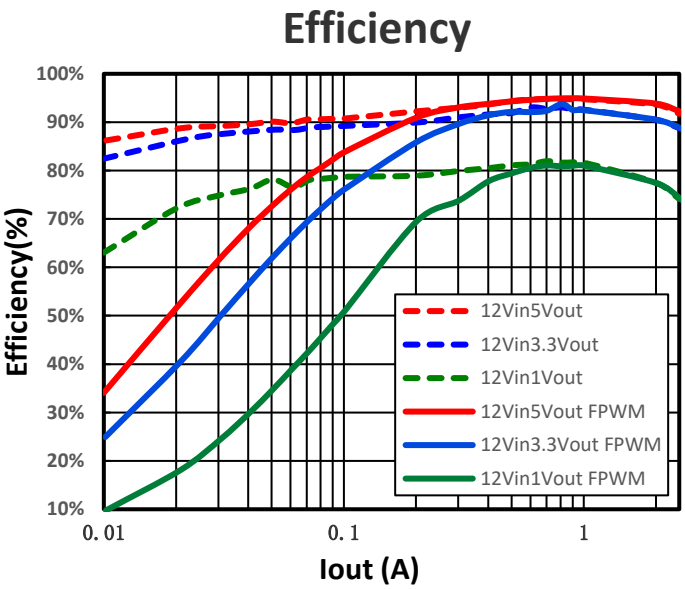

Ordering Information

Part No.	Marking	Temp. Range	Package	MOQ
MT8553NSCR (Pulse Skip Mode)	8553 YWWxx	-40°C ~+85°C	SOT23_6L	3000/Tape & Reel
MT8553ASCR (Forced-PWM Mode)	8553A YWWxx	-40°C ~+85°C	SOT23_6L	3000/Tape & Reel

Note: Y: Year, WW: Week, xx: Manufacture Control Code

Pin Configuration

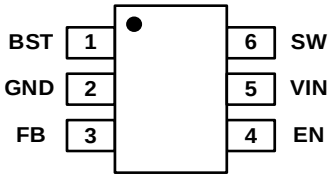

SOT23_6L

Pin Description

Pin Name	Pin NO.	DESCRIPTION
BST	1	Bootstrap. A 100nF ceramic capacitor connected between SW and BST pins is required to form a floating supply for the high-side switch driver.
GND	2	Power ground
FB	3	Feedback. An external resistor divider from the output to GND, tapped to the FB pin, sets the output voltage
EN	4	Enable pin. MT8553 is shut down when this pin is low and active when this pin is high. The hysteretic enable threshold voltage is 1.21V going up and 1.11V going down. Connect EN with VIN through a pull-up resistor or a resistive voltage divider for automatic startup. An external resistor divider from VIN can be used to program a VIN threshold below to stop the MT8553 operation. There is an internal 1000kΩ (typical) pull down resistor from EN to AGND.
VIN	5	Supply Voltage. The VIN pin supplies power for internal MOSFET and regulator. The MT8553 operates from a 4.5V to 18V input rail. An input capacitor is needed to decouple the input rail.
SW	6	Switch Output. Connect this pin to the inductor and bootstrap capacitor. SW node should be kept small on the PCB for good performance and low EMI.

Application Schematic

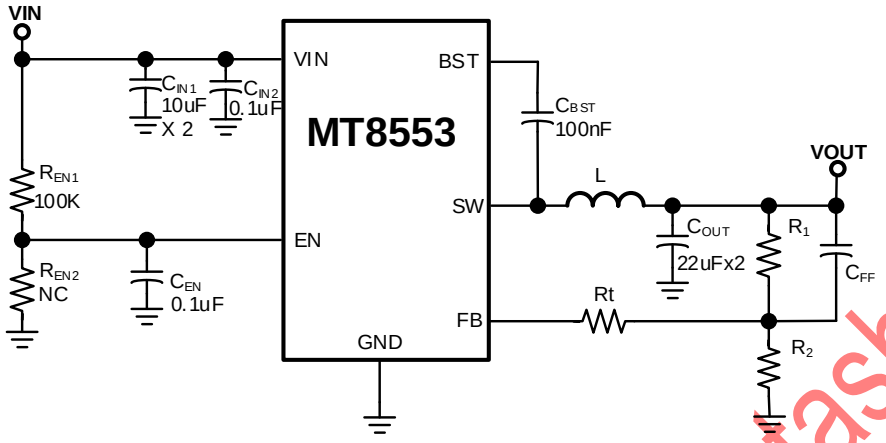

EVB BOM List

Qty	Ref	Value		Description	Package
2	C_{IN1}	10µF		Ceramic Capacitor, 50V, X5R	0805
2	C_{IN2}, C_{EN}	0.1µF		Ceramic Capacitor, 50V, X5R	0603
2	C_{OUT}	22µF		Ceramic Capacitor, 16V, X5R	0805
1	C_{BST}	100nF		Ceramic Capacitor, 10V, X5R	0603
1	L	Vout=5V	2.2uH	Inductor, Isat> 6A	SMD
		Vout=3.3V	1.5uH		
		Vout=1.0V	0.47uH		
1	R_1	Vout=5V	100k Ω	Resistor, ±1%	0603
		Vout=3.3V	100k Ω		
		Vout=1.0V	100k Ω		
1	R_2	Vout=5V	13.7k Ω	Resistor, ±1%	0603
		Vout=3.3V	22.1k Ω		
		Vout=1.0V	150k Ω		
	Rt	500 Ω		Resistor, ±1%	0603
1	C_{FF}	100pF		Ceramic Capacitor, 10V, X5R	0603
2	R_{EN1}	100KΩ		Resistor, ±5%	0603
1	Power IC	MT8553		Step-Down DC/DC Converter	SOT23_6L

Package Information

SOT23_6L Outline Dimensions

Unit: inches/mm

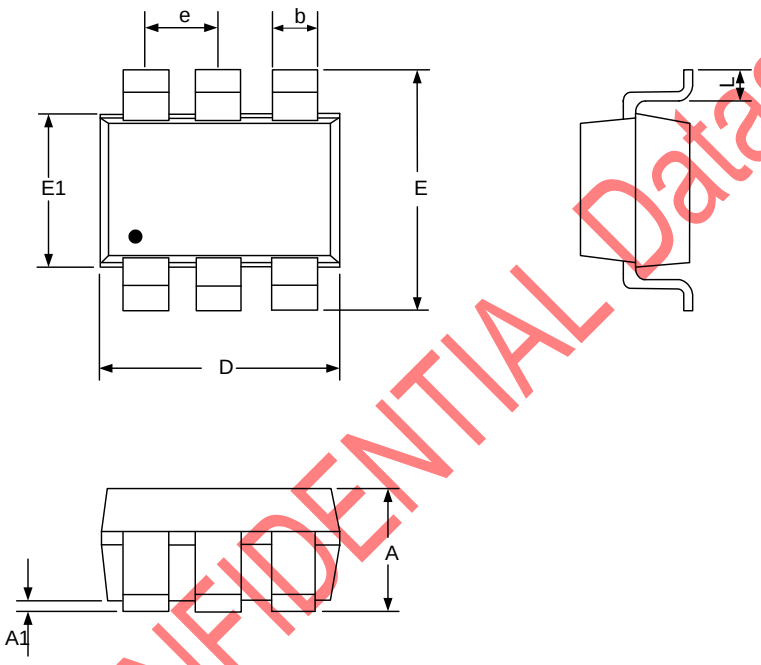

SYMBOLS	MILLIMETERS		INCHES	
	MIN.	MAX.	MIN.	MAX.
A	0.89	1.45	0.035	0.057
A1	0.00	0.15	0.000	0.006
b	0.30	0.50	0.012	0.020
D	2.70	3.10	0.106	0.122
E1	1.40	1.80	0.055	0.071
e	0.84	1.04	0.033	0.041
E	2.60	3.00	0.102	0.118
L	0.30	0.60	0.012	0.024

Tape & Reel Carrier Dimensions

SOT23_6:

1. Orientation / Carrier Tape Information:

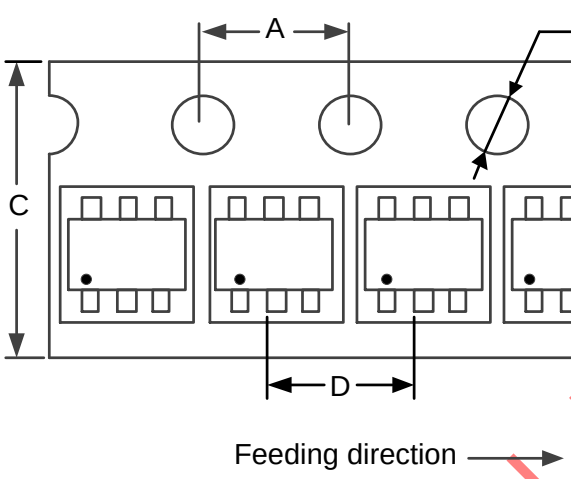

1. Reel Information:

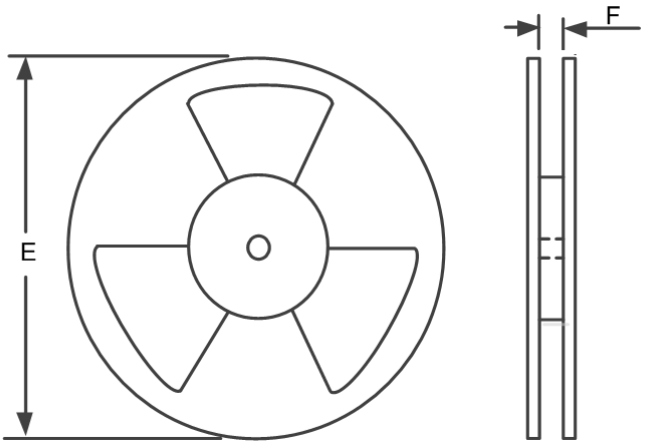

2. Dimension Details:

PKG Type	A	B	C	D	E	F	Q'ty/Reel
SOT23_6L	4.0 mm	1.5 mm	8.0 mm	4.0 mm	7 inches	9.0 mm	3,000

Reflow Profile

Classification Of IR Reflow Profile

Reflow Profile	Green Assembly
Average Ramp-Up Rate (Ts_{min} to Tp)	1~2℃/second, 3℃/second max.
Preheat & Soak -Temperature Min(Ts_{min}) -Temperature Max(Ts_{max}) -Time($ts_{min}$to $tsts_{max}$)	 150℃ 200℃ 60~120 seconds
Time maintained above: -Temperature(T_L) -Time(t_L)	 217℃ 60~150 seconds
Peak Temperature(Tp)	See Classification Temp intable1
Time within 5℃of actual Peak Temperature(tp)	30 seconds max.
Ramp-Down Rate	6℃/second max.
Time 25℃ to Peak Temperature	8 minutes max.

* Tolerance for peak profile Temperature(T_p) is defined as a supplier minimum and a user maximum.
** Tolerance for time at peak profile temperature (t_p)is defined as a supplier minimum and a user maximum.

Table 1. Pb-freeProcess –Classification Temperatures (Tc)

Package Thickness	Volume mm^3 <350	Volume mm^3 350-2000	Volume mm^3 >2000
<1.6mm	260℃	260 ℃	260℃
1.6mm–2.5mm	260℃	250℃	245℃
≥2.5mm	250 ℃	245℃	245℃

Note: For all temperature information, please refer to topside of the package, measured on the package body surface.